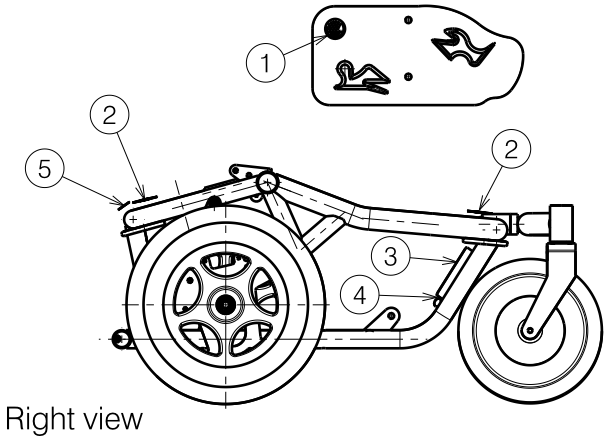

Right view

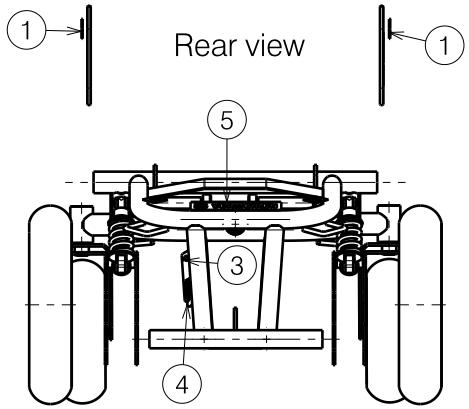

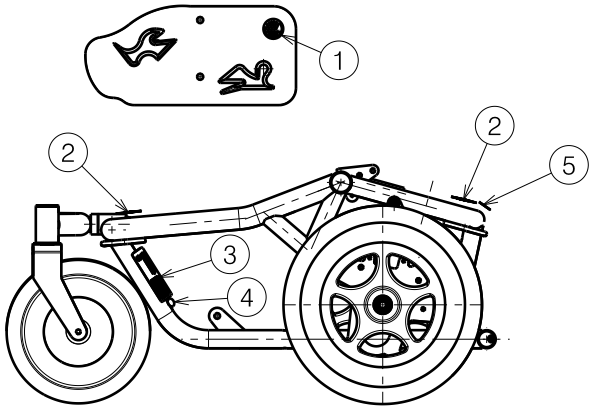

Left view

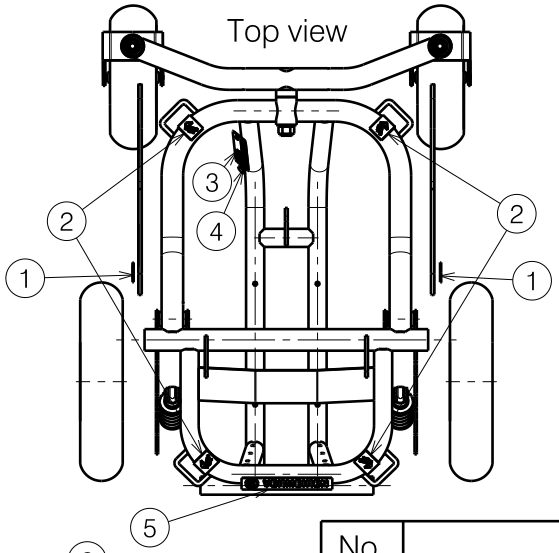

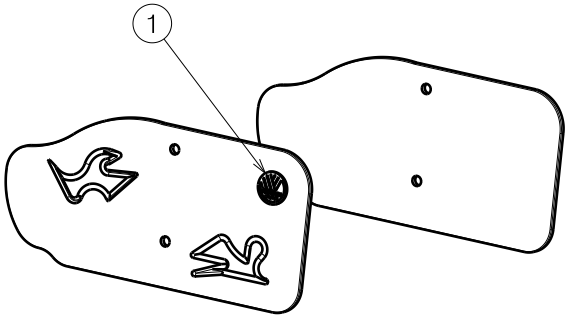

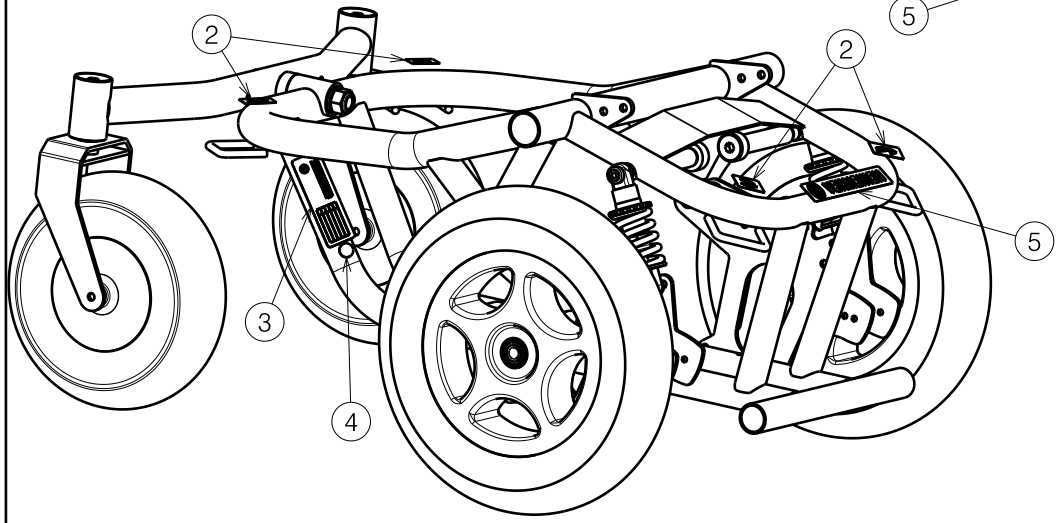

No.	Title	Art. nr	Sticker	Quantity
1	Sticker Φ35 logo Vermeiren	T001002		2
2	Sticker taxi hooks	T001076		4
3	Sticker serial number	T001097		1
4	Sticker recyclage electro	1997820		1
5	Sticker name Vermeiren new large	T001052	VERMEIREN	1

STICKER CONFIGURATION FOREST				Plan Number
				E000676/D
Scale: 1:10	Drafted	Verified	Confirmed	
Date	14/01/2011	27/01/2015	27/01/2015	
Initals	TT	TT	PJ	